PROJECT BASED LEARNING SYNOPSIS

on

"*Vehicle Modeling of an Electric Bike (Project 2)*"

DATE: 13/11/2021

Prepared by Team 5

Aditya Dadgal	-May
Ashutosh Ankulkar	-August
Narendra Duttatray Yadav	-September
Surbhi Aggarwal	-March
Swapnil Sunil Shinde	-April

Team Member Details

S No	Name	Engineering Field	Occupation	Role in Project
1	Aditya Dadgal	Electrical Engg.	Student	Collaborative work by each team member
2	Ashutosh Ankulkar	Mechanical Engg	Employed	
3	Narendra Duttatray Yadav	Mechanical Engg	Student	
4	Surbhi Aggarwal	Electrical Engg.	PhD. (Research Scholar)	
5	Swapnil Sunil Shinde	Electrical Engg.	Employed	

DIYguru Educationand Research Pvt.Ltd

LIST OF FIGURES

FIGURE 1: MAGIC TIRE 4
FIGURE 2:VEHICLE BODY 4
FIGURE 3: MATLAB MODEL FOR DC MOTOR 4
FIGURE 4: MATLAB MODEL FOR H-BRIDGE 4
FIGURE 5: MATLAB MODEL FOR LONGITUDINAL DRIVER 5
FIGURE 6: BATTERY MODEL FROM MATLAB LIBRARY 5
FIGURE 7: SIMULATION DIAGRAM OF THE PROPOSED PROJECT 6
FIGURE 8: SUB-FIGURES OF THE PROPOSED PROJECT 6
FIGURE 9: MOTOR POWER OUTPUT FOR IDC 7
FIGURE 10: MOTOR RPM OUTPUT FOR IDC 7
FIGURE 11: POWER CONSUMPTION PER KM BY MOTOR FOR IDC 8
FIGURE 12: BATTERY SOC OUTPUT FOR IDC 8
FIGURE 13: COMPARING THE IDC AND SIMULATED VEHICLE 9
FIGURE14:MOTOR POWER OUTPUT FOR WLTP DRIVE CYCLE 10
FIGURE 15:POWER CONSUMPTION PER KM BY MOTOR FOR WLTP DRIVE CYCLE 11
FIGURE 16: BATTERY SOC OUTPUT FOR WLTP DRIVE CYCLE 11
FIGURE 17: COMPARING THE WLTP DRIVE CYCLE AND SIMULATED VEHICLE 12
FIGURE 18: US EPA URBAN DYNAMOMETER DRIVE SCHEDULE (FTP 75) 13
FIGURE 19: MOTOR POWER OUTPUT FOR FTP DRIVE CYCLE 14
FIGURE 20: POWER CONSUMPTION PER KM BY MOTOR FOR FTP DRIVE CYCLE 14
FIGURE 21:BATTERY SOC OUTPUT FOR FTP DRIVE CYCLE 15
FIGURE 22: COMPARING THE FTP DRIVE CYCLE AND SIMULATED VEHICLE 15

DIYguru Educationand Research Pvt.Ltd

Chapter2: Project Description

The transportation sector has taken a turn with the introduction of Electric Vehicles, thanks to technological advancements. Electric vehicles assist humanity by providing a clean, environment friendly mode of transportation. Determining the motor and battery parameters is one of the most difficult aspects of electric vehicle design, especially since there are so many different types of requirements and standards in various designs. This project explains how to model an electric bike with a 2kW 48V BLDC motor and a 48V 50Ah battery capacity in MATLAB, Simulink environment and several elements such asVehicle Speed,driving range, and Battery State of Chargeareestimated. The comparison of the calculated parameters is done using the Indian Drive Cycle (IDC) and Worldwide Harmonized Light Vehicle Test Procedure (WLTP).

Chapter 3 : Research Methodology

MATLAB\SIMULINK environment is used to implement the electric bike modelling, with a 2kW 48V BLDC motor and a 48V 50Ah battery capacity. The whole modelling is subsystem into 4major sub systems:
1) Wheels and Transmission System.
2) Motor Controller part along with the inversion portion
3) The longitudinal driver Part
4) The Battery Controller Part

Starting with the Wheels and Transmission Subsystem part,Magic Tires are used from the MATLAB library as shown in figure 1. The wheels are connected to the Vehicle body. Vehicle body in the Simulink platform looks like as shown in figure 2.

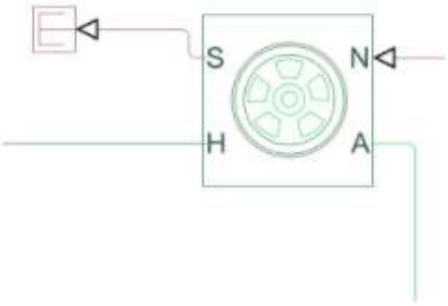

Figure 1: Magic Tire

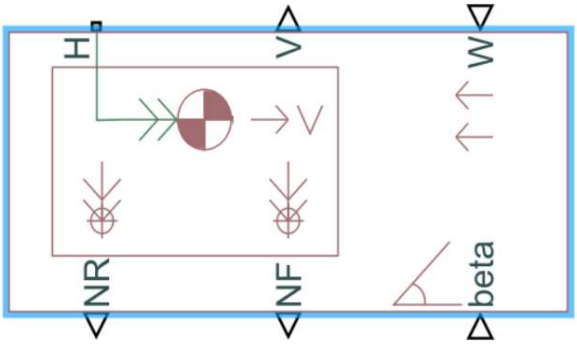

Figure 2:Vehicle Body

Givenin this system, the parameters values are:

- Gear Ratio = 3.8:1
- Weight distribution front= 55%
- Weight distribution rear= 45%
- Mass of the vehicle (including driver) = 180 kg
- Frontal Area = 0.6m^2
- Drag Coefficient = 1.6
- Tire size = 100/90 R17

A DC motor is used in the project to model the vehicle as shown in figure 3 as DC motors are easier to control as compared to AC motors. A H-bridge as shown in figure 4 is used to supply a controlled DC voltage to the DC motor along with a PWM source to provide controlled voltage modulation to the H-bridge.

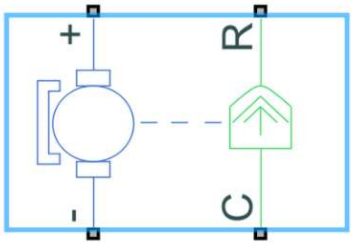

Figure 3: MATLAB model for DC motor

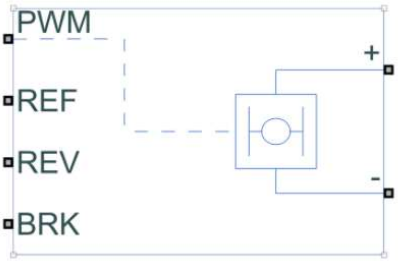

Figure 4: MATLAB model for H-Bridge

DIYguru Educationand Research Pvt.Ltd

Given in this system, the parameters values are:

- Motor Rating = 2kW 48V
- Motor Efficiency = 90%
- Motor Type = Mid drive

To control all of the inputs, driver is required for our Simulink model. For that, a longitudinal driver is used from Simulink library in the project as shown in figure 5.

A parametric longitudinal speed tracking controller for generating normalized acceleration and braking commands based on reference and feedback velocities.
So, velocity feedback from Velocity body is connected to longitudinal driver.

The last and the utmost important subsystem in an Electric Vehicle is the Battery.Lithium-ion batteries charge and discharge using the movement of lithium ions to and from the electrode material. Battery output density has so far generally been increased by reducing the electrode film thickness to decrease resistance. For the project, Li-ion battery model is used from the Simulink library as sown in figure 6 to determine the SOC of the system.

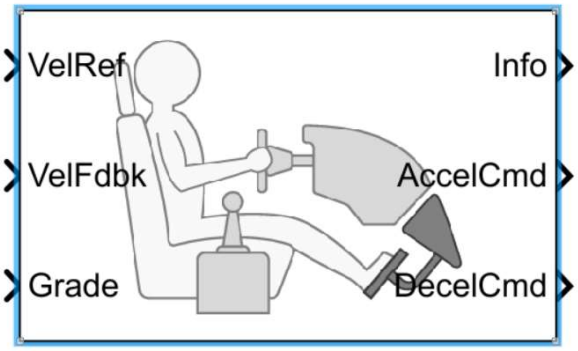

Figure 5: MATLAB model for Longitudinal driver

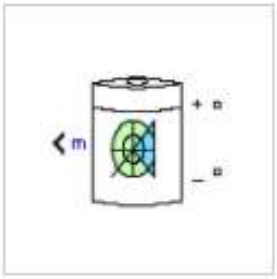

Figure 6: Battery model from MATLAB library

Simulation of Electric Bike with Simulink

Figure 7 depicts the whole electric bike simulation, which employs the Worldwide Harmonized Light Vehicles Test Procedure (WLTP) drive cycle for 1022 seconds; Indian Driving Cycle (IDC) for 108 seconds; and Federal Test Procedure (FDP-75) drive cycle for 2474 seconds.
For clarity purpose,expanded figures of the detailed model are shown as sub-figures in figure 8.

The results are simulated considering all the three test cases and are explained in detailed with the help of tables and figures in the further sections.
The cases are divided as:

Case 1: Indian Driving Cycle (IDC)
Case 2: Worldwide Harmonized Light Vehicles Test Procedure (WLTP) drive cycle
Case 3: Federal Test Procedure (FTP-75) drive cycle

DIYguru Educationand Research Pvt.Ltd

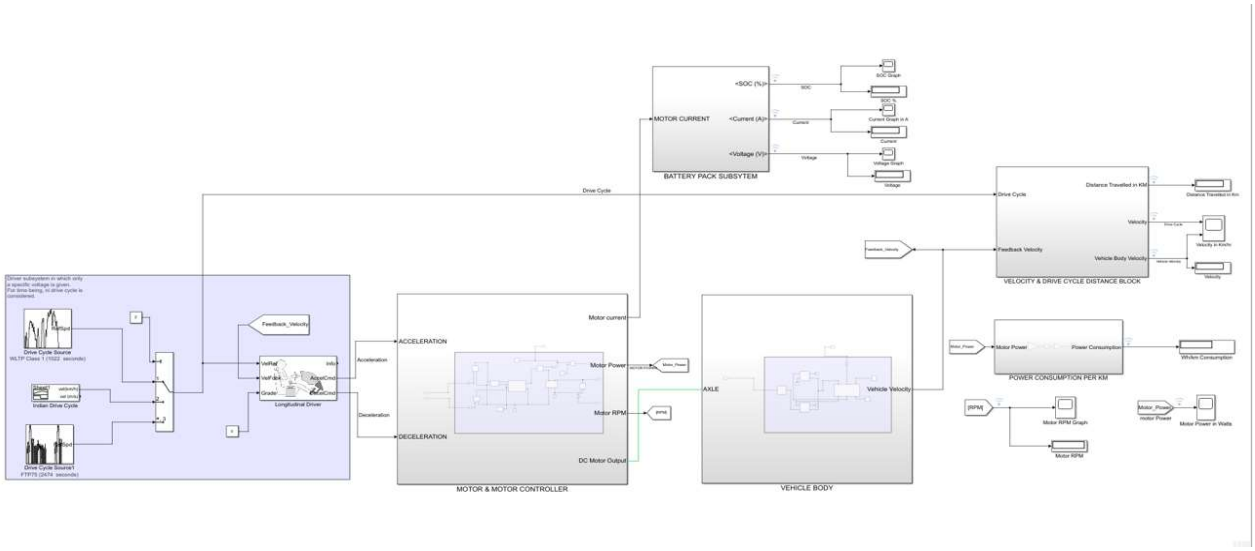

Figure 7: Simulation diagram of the proposed project

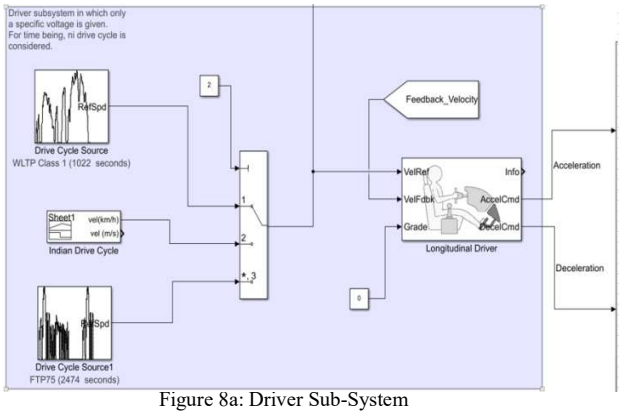

Figure 8a: Driver Sub-System

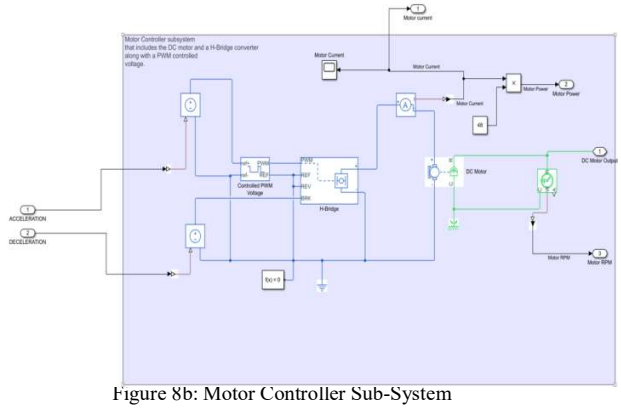

Figure 8b: Motor Controller Sub-System

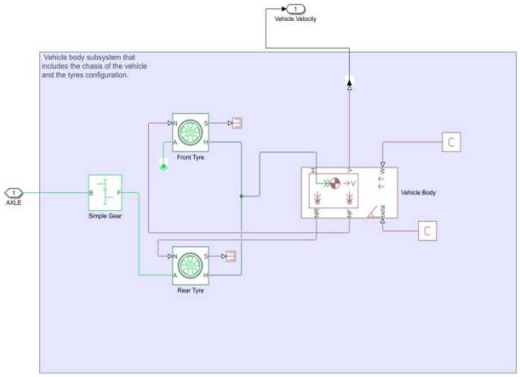

Figure 8c: Vehicle body Sub-System

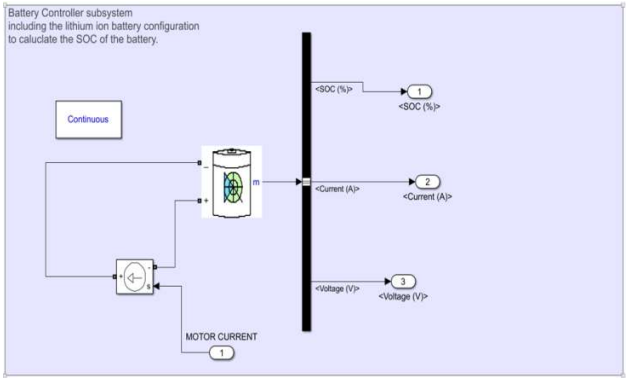

Figure 8d: Battery Controller Sub-System

Figure 8: Sub-figures of the proposed project

DIYguru Educationand Research Pvt.Ltd

Case 1: Indian Drive Cycle (IDC)

A driving cycle is a series of data points representing the speed of a vehicle versus time.
The Indian Drive cycle is simulated for 108 seconds.
The results for various outputs are shown below:

Figures 9 and 10 demonstrate the associated outputs for the proposed project in the form of graphs, starting with motor power output and corresponding motor rpm.

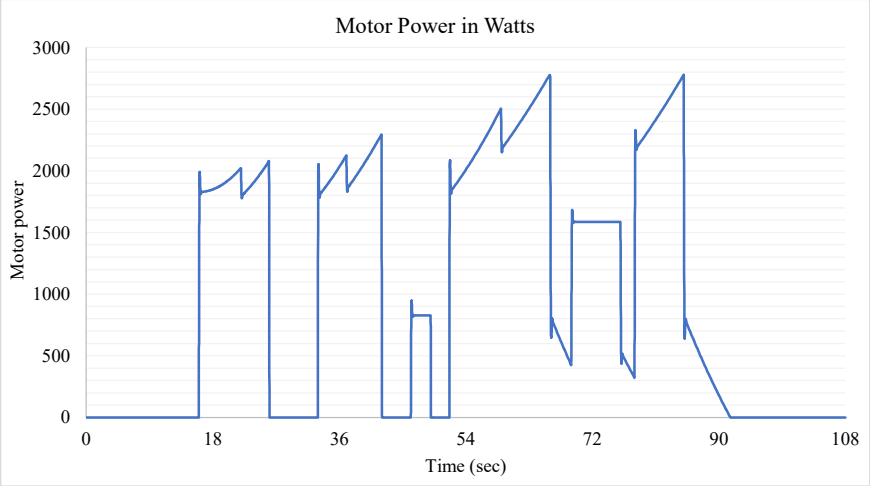

Figure 9: Motor power output for IDC

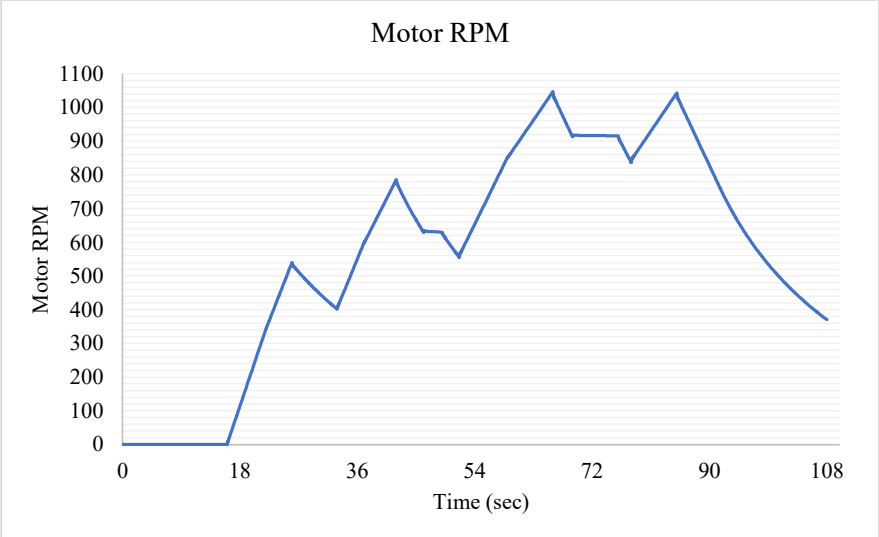

Figure 10: Motor RPM output for IDC

Figure 11 depicts the battery's power consumption per kilometer during the IDC drive cycle.

DIYguru Educationand Research Pvt.Ltd

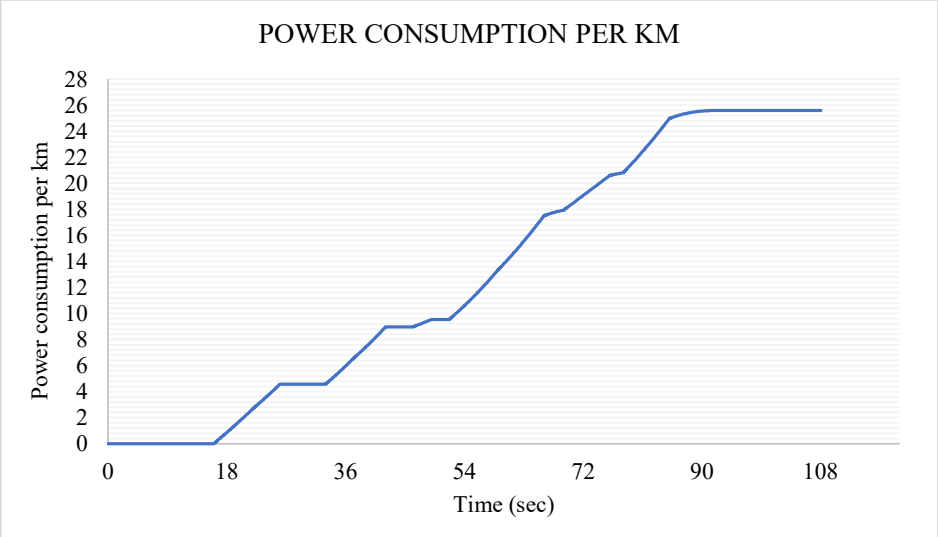

Figure 11: Power consumption per km by motor for IDC

Let's look at the battery SOC level now that we've figured out after the battery power consumption. Figure 12 depicts the comparable Battery SOC output for IDC.

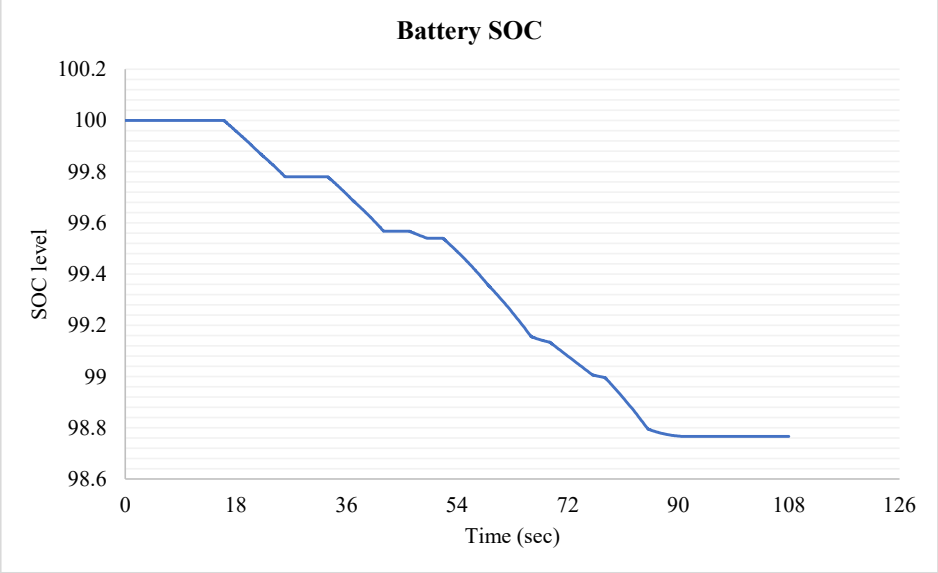

Figure 12: Battery SOC output for IDC

Figure 13 shows the final plot showing the comparison for IDC and Simulated vehicle velocity.
As shown in Figure 13, the proposed 2-wheeler concept satisfies and follows the Indian drive cycle to the greatest extent possible.

DIYguru Educationand Research Pvt.Ltd

In case 1, all of the data for IDC are thoroughly discussed, including the Battery performance and SOC output, the car's mileage travelled, and the comparison between the IDC and the simulated vehicle.
Moving further with the project, the second case, the Worldwide Harmonized Light Vehicles Test Procedure (WLTP) drive cycle, will be investigated and the results will be presented.

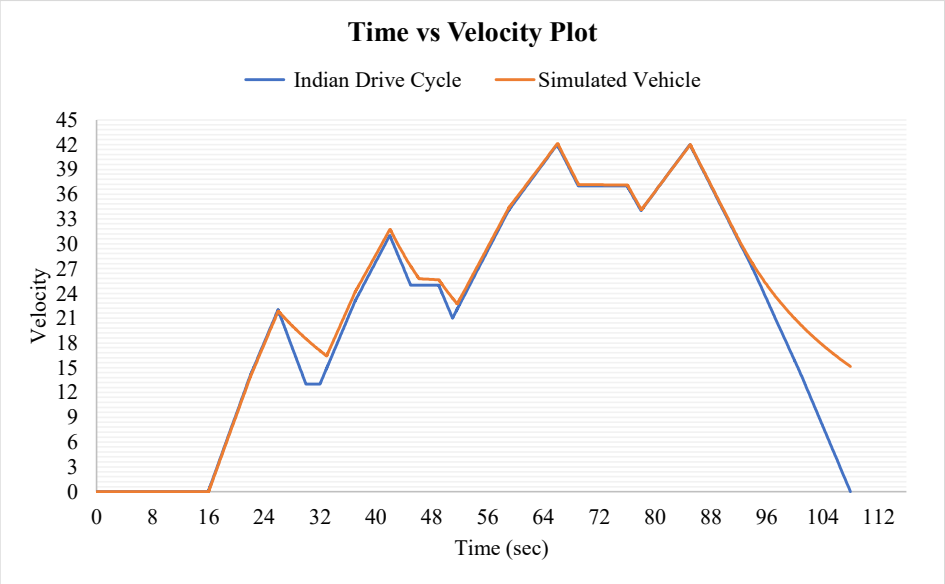

Figure 13: Comparing the IDC and Simulated Vehicle

Case 1 Results Analysis:

IDC Parameter	Theoretical Result	Simulation Result
Motor Efficiency	0.90	0.90
Distance travelled (m)	657.92	657.92
Energy Consumed (Wh)	17.14	16.83
Wh/km	28.95	25.58
%SoC Remaining	99.21	98.76

From the above table, we can see that results obtained from theory and simulation are consistent.
The peak power in the simulation was found to be 2.77kW (ref Figure 9), which the motor can support assuming peak power to be 1.5 times the rated power.

Rated power = 2kW
Peak power = 2*1.5 kW = 3kW (> 2.77kW)

Vehicle Range = Battery capacity / (Wh/km) = (48V * 50Ah) / 25.58 Wh/km = 93.82 km

DIYguru Educationand Research Pvt.Ltd

Case 2: Worldwide Harmonized Light Vehicles Test Procedure (WLTP)

The WLTP (World harmonized Light-duty vehicles Test Procedure) is a global harmonized standard for determining the levels of pollutants, CO2 emissions and fuel consumption of traditional and hybrid cars, as well as the range of fully electric vehicles.This new protocol is Addenda No. 15 to the Global Registry (Global Technical Regulations) defined by the 1998 Agreement adopted by the Inland Transport Committee of the United Nations Economic Commission for Europe (UNECE), agreement accepted by China, Japan and the United States, and approved by the European Union.

Three different WLTC test cycles are applied, depending on vehicle class defined by power/weight ratio PWr in W/kg (rated engine power / kerb weight)

- Class 1 – low power vehicles with PWr<= 22;
- Class 2 – vehicles with 22 <PWr<= 34;
- Class 3 – high-power vehicles with PWr> 34;

For our proposed project, Class1 WLTC is applied.
Class 1 test cycle has low and medium-speed parts, performed in a sequence low–medium–low; if Vmax < 70 km/h, the medium-speed part is replaced with low-speed part.

Figures 14 and 15 demonstrate the associated outputs for the proposed project in the form of graphs, starting with motor power output and battery's power consumption per kilometer during the WLTP drive cycle.

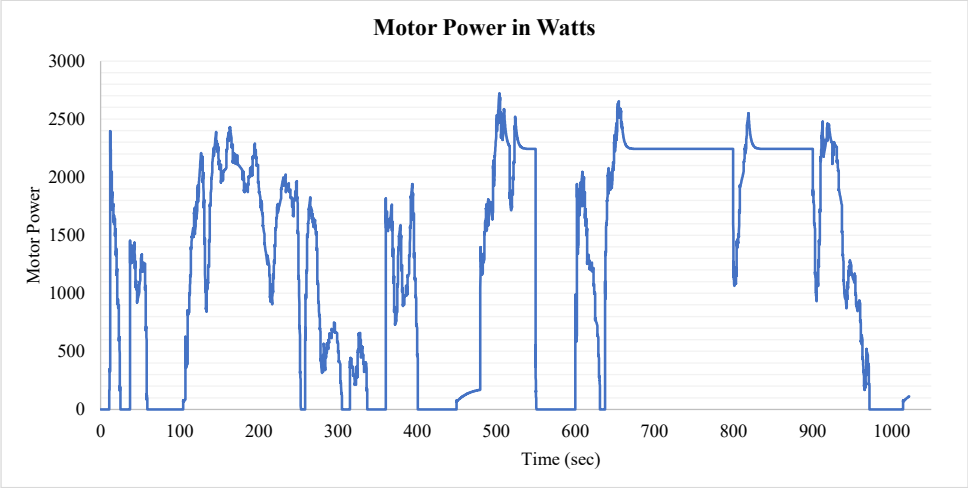

Figure14:Motor power output for WLTP drive cycle

DIYguru Educationand Research Pvt.Ltd

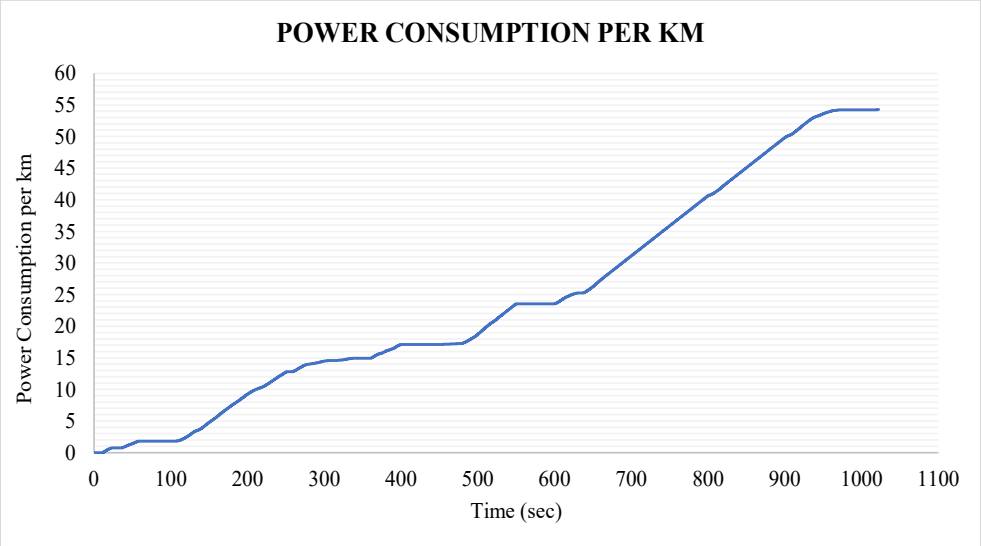

Figure 15:Power Consumption per km by motor for WLTP drive cycle

Let's look at the battery SOC level now that we've figured out after the battery power consumption. Figure 16 depicts the comparable Battery SOC output for WLTP drive cycle.

Figure 17 shows the final plot showing the comparison for WLTP drive cycle and Simulated vehicle velocity.
As shown in Figure 17, the proposed 2-wheeler concept did not satisfy and follows the WLTP drive cycle to the greatest extent possible.

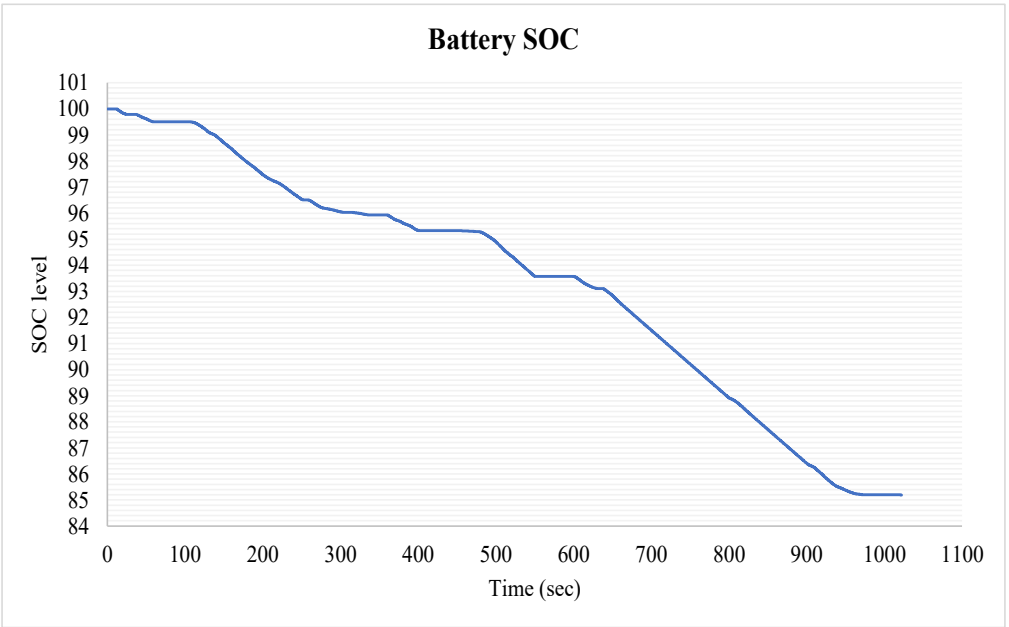

Figure 16: Battery SOC output for WLTP drive cycle

DIYguru Educationand Research Pvt.Ltd

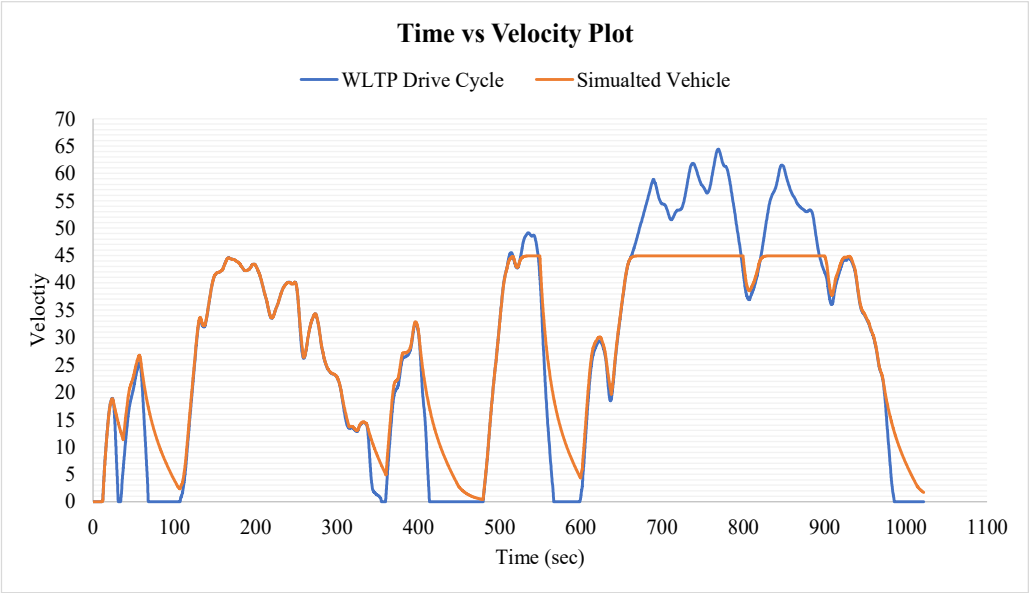

Figure 17: Comparing the WLTP drive cycle and Simulated Vehicle

Case 2 Results Analysis:

As can be seen from Figure 17, peak velocity obtained from simulation is 45 kmph. WLTP Class1 drive cycle requires the vehicle to be driven at max velocity of 65 kmph. Hence, we conclude that the motor (Rated Power of 2kW) is not sufficient to provide required velocity to the scooter.

Case 3: Federal Test Procedure (FTP-75) drive cycle

The FTP-75 (Federal Test Procedure) has been used for emission certification and fuel economy testing of light-duty vehicles in the United States. The test is often referred to as simply 'FTP'.

The FTP-75 and the FTP-72 are two variants of the EPA Urban Dynamometer Driving Schedule (UDDS). The FTP-75 cycle is derived from the FTP-72 by adding a third phase of 505 s, identical to the first phase of FTP-72 but with a hot start. The third phase starts after the engine is stopped for 10 minutes. Thus, the entire FTP-75 cycle consists of the following segments:

1.Cold start transient phase (ambient temperature 20-30°C), 0-505 s,
2.Stabilized phase, 506-1372 s,
3.Hot soak (min 540 s, max 660 s),
4.Hot start transient phase, 0-505 s.

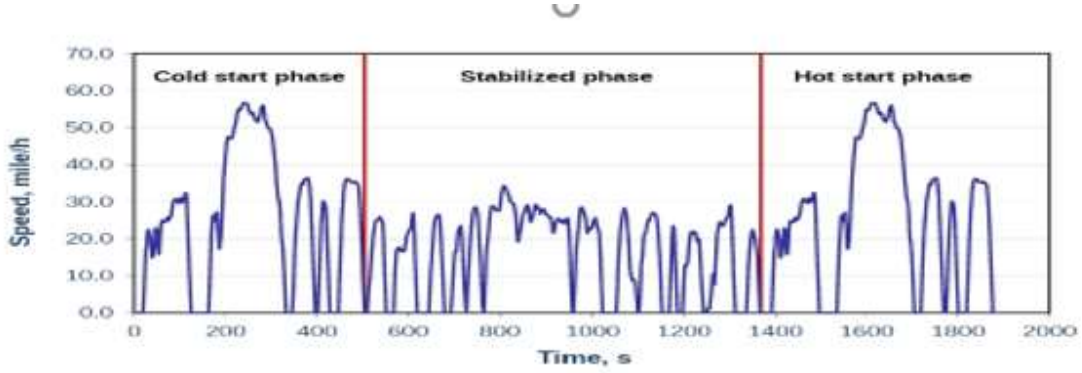

Figure 18: US EPA Urban Dynamometer Drive Schedule (FTP 75)

The following are some basic parameters of the cycle:
1.Duration: 1877 s
2.Distance traveled: 11.04 miles (17.77 km)
3.Average speed: 21.2 mph (34.12 km/h).
4.Maximum speed: 56.7 mph (91.25 km/h).

Figures 19 and 20 demonstrate the associated outputs for the proposed project in the form of graphs, starting with motor power output and battery's power consumption per kilometer during the FTP drive cycle.

DIYguru Educationand Research Pvt.Ltd

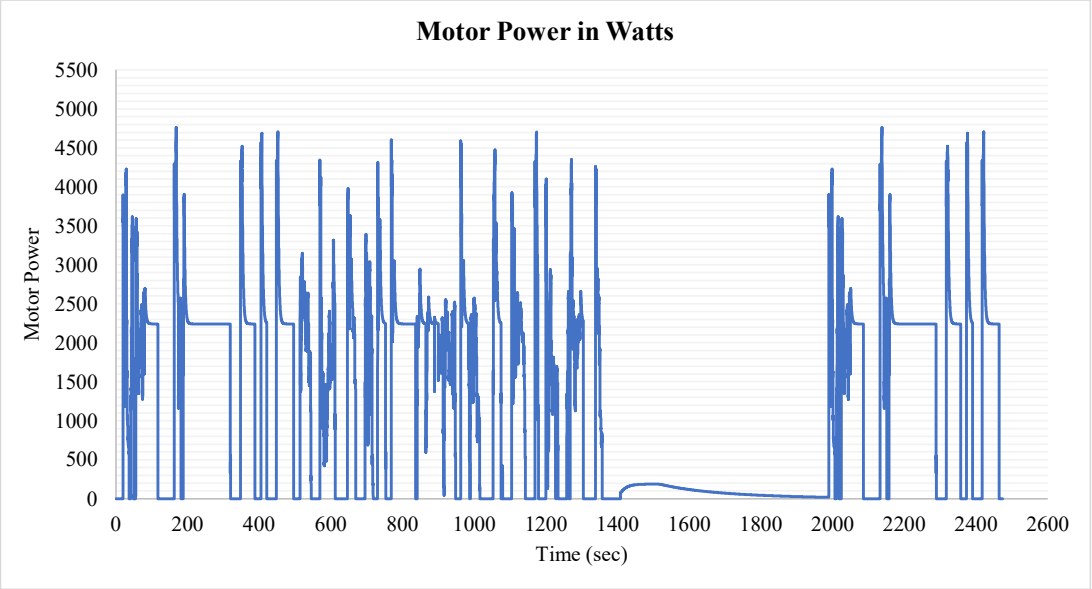

Figure 19: Motor Power output for FTP drive cycle

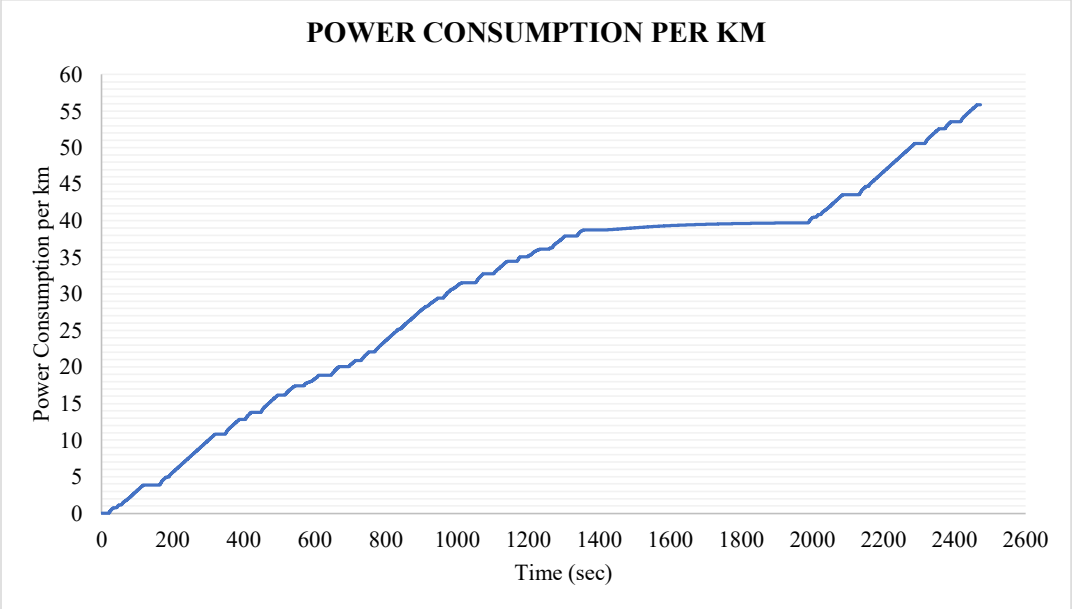

Figure 20: Power Consumption per km by motor for FTP drive cycle

Let's look at the battery SOC level now that we've figured out after the battery power consumption. Figure 21 depicts the comparable Battery SOC output for FTP drive cycle.

Figure 22 shows the final plot showing the comparison for FTP drive cycle and Simulated vehicle velocity. As shown in Figure 22, the proposed 2-wheeler concept did not satisfy and follows the FTP drive cycle to the greatest extent possible.

DIYguru Educationand Research Pvt.Ltd

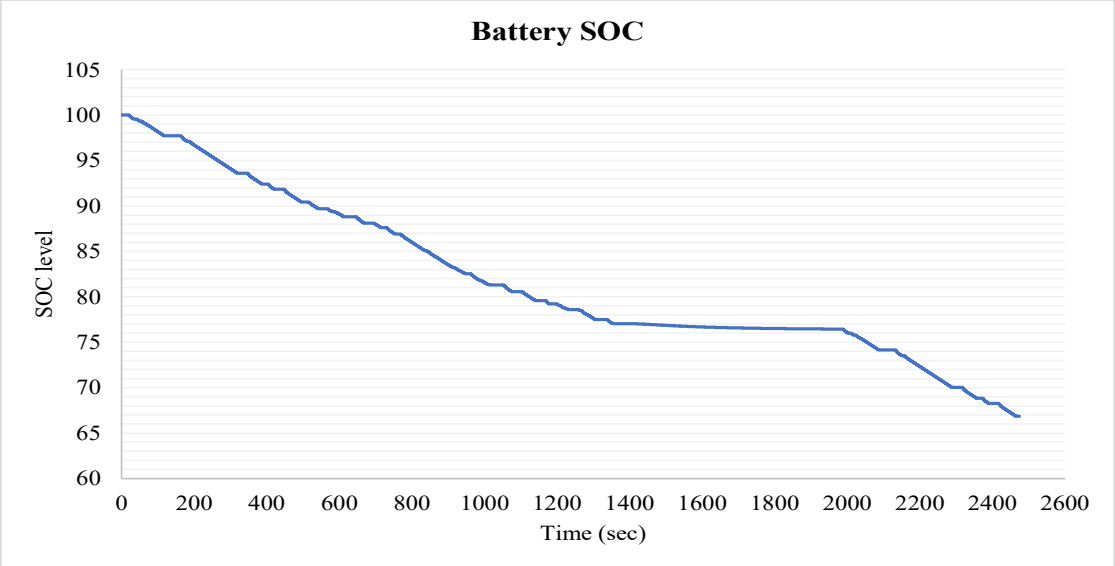

Figure 21:Battery SOC output for FTP drive cycle

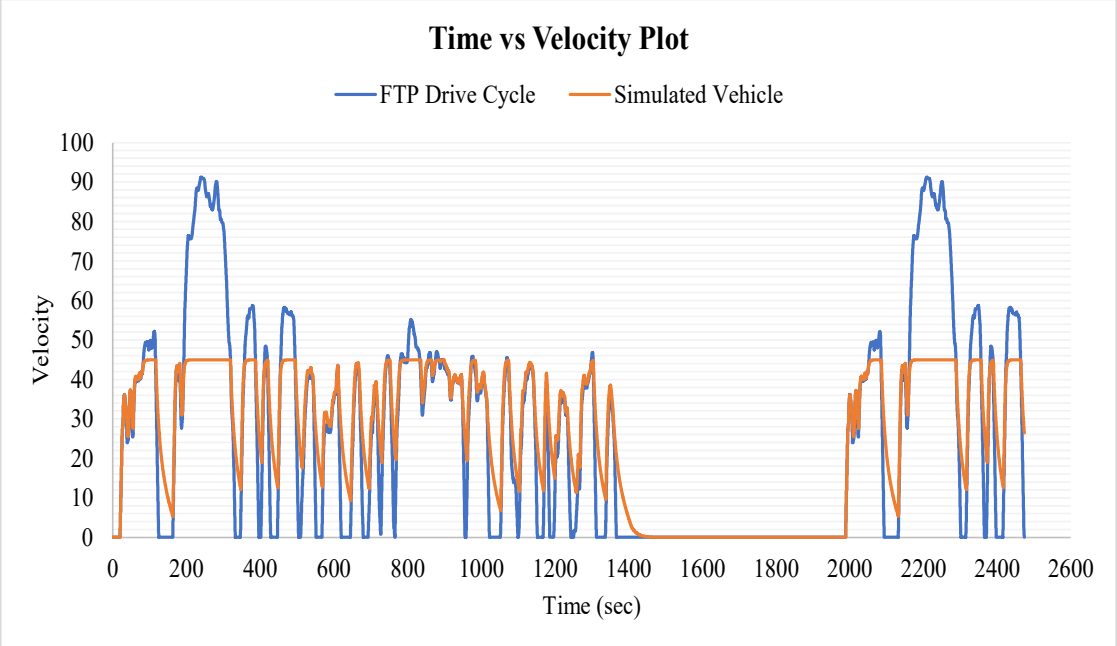

Figure 22: Comparing the FTP drive cycle and Simulated Vehicle

Case 3 Results Analysis:

As can be seen from Figure 22, peak velocity obtained from simulation is 45 kmph. FTP drive cycle requires the vehicle to be driven at max velocity of 90 kmph. Hence, we conclude that the motor (Rated Power of 2kW) is not sufficient to provide required velocity to the scooter.

References:

- https://onlinecourses.nptel.ac.in/noc21_ee112/preview
- http://www.nrcontrols.in/products.html
- https://github.com/jollyjinx/EV-Range/blob/master/Resources/WLTC/WLTP-DHC-12-07e.xls
- "Modeling of an Electric Vehicle with MATLAB/Simulink" - Kiyakli and Solmaz/International Journal of Automotive Science and Technology 2 (4): 9-15, 2018
- https://unece.org/DAM/trans/doc/2012/wp29grpe/WLTP-DHC-12-07e.xls